Amphenol JAYBEAM

CylLine Range

880-960 / 1710-2170 MHz

Preliminary

5860120-K03

5860020-K03 5860020G-K03

- Cylindrical base-mounted sector antenna
- 253 mm diameter
- Dual Band Antenna, Dual polarisation, 4 connectors
- Same RF characteristics as our 5860100 antenna
- MET and RET versions, AISG1.1 or 3GPP/AISG2.0
- Service area under the antenna

XXpol / 65° Az
17.5 / 18 dBi

Model number options :	**5860120-K03**	Manual electrical tilt antenna
	5860020-K03	Remote electrical tilt antenna (AISG1.1)
	5860020G-K03	Remote electrical tilt antenna (3GPP/AISG2.0)

Access Ports Description (Connectors)			
The Antenna has 4 connectors located at its bottom face and marked with colour rings. See photo on next page.			
Low band:	880-960 MHz ports	**RED** rings	2 x 7-16 DIN female Long Neck
High band:	1710-2170 MHz ports (wide band)	**BLUE** rings	2 x 7-16 DIN female Long Neck

Electrical Characteristics	Low Band Red	High Band Blue	
Frequency Band (MHz)	880…960	1710…1880	1900…2170
Gain (dBi) tilt 0°	17.0…17.5	17.3…17.6	17.6…18.1
tilt 5°	17.0…17.5	17.2…17.4	17.4…17.9
tilt 10°	16.9…17.4	17.2…17.3	17.3…17.7
Input Impedance	50 ohms	50 ohms	
VSWR	<1.4	<1.4	
Polarisation	±45°	±45°	
Horizontal Beamwidth (-3 dB)	65°	65°	64°
Vertical Beamwidth (-3 dB)	7°	6°	6°
Electrical Downtilt range	0° to 10°	0° to 10°	
Isolation between ports	>30 dB	>30 dB	
Isolation between bands	45 dB typ.	45 dB typ.	
Upper Sidelobe Rejection (20° sector above main beam)	18 dB typ.	18 dB typ.	
Front to back ratio	>30 dB	>30 dB	
Maximum Power (per port)	200 W	160 W	
Intermodulation 3rd order for 2 x 20 W carriers	<-110 dBm	<-110 dBm	

Electrical Downtilt Control

Electrical downtilt can be controlled separately for Low Band and High Band.
The two tilt indicators are covered by a removable transparent cap. See photo on next page.

Manual control: A coloured knob at the end of the tilt indicator allows change of the tilt without need for a tool. Knob colour is identical to connector colours as defined above. To access the knob, the cap is removed by turning it counter clockwise. It is re-installed by opposite rotation.

Remote control (RET) : The remote control of the electrical tilt is managed by a module (MDCU) totally inserted at the bottom of the antenna. One single module controls individually the tilt of each band (no need of daisy chain cables between the bands). For RET control, the transparent cap must be in place and locked.
This module does not add any additional length at the bottom of the antenna. The tilt angle indicator stays always visible and the antenna still has manual tilt control (manual override).

RET module part number (only one needed per antenna) :

MDCU-A0000	For AISG1.1 protocol (one unit included in 5860020-K03)
MDCU-G0000	For 3GPP/AISG2.0 protocol (one unit included in 5860020G-K03)

An antenna ordered in a RET version is delivered fitted with its factory preset MDCU module, operational with no further action.

DT 5556 - Ed D - page 1/4 - *We reserve the rights to modify our products without prior notice - Several patents pending regarding this product.*

Preliminary

5860120-K03

5860020-K03 5860020G-K03

Mechanical Characteristics		
The CylLine system comes as an antenna and a service area section acting as an installation mast. The cylindrical shroud covers the whole antenna, excepting for the rear of the antenna where the aluminium structure profile is apparent. The service area, mounted under the antenna, is closed by a dismountable shroud in order to give access to the connectors and to the tilt indicators for tuning. A TMA may be installed in the service area. It is mandatory to install the antenna with the provided service area.		
Dimensions (see drawing)	Height: 3725 mm	Diameter : 253 mm
Weight	Antenna : 45 kg Total : 64 kg	Service area : 19 kg
Shrouds	Outdoor plastic, NCS2502B grey	
Wind speed	Operational : 160 km/h	Survival : 200 km/h
Wind load at 160 km/h	757 N	

List of parts

The supply includes :

One antenna 5860120 (MET), or 5860020 (RET AISG1.1), or 5860020G (RTE 3GPP/AISG2.0)
One service area, length 1 m
All scews, nuts and washers for assembly

Installation of cables

The shroud of the service area is left open on 14 cm at the bottom side, in order to let the cables in.

It is recommended to use 1/2" Super-Flexible coaxial jumpers, in order to make their installation in the service area easier, due to their minimal bending radius (see installation guide).

Environmental	
Operating Temperature Range	-40°C to +60°C
Environmental	ETS 300 019

Packaging

Two boxes :

One carton box (antenna)
2.83 x 0.38 x 0.38 m
0.408 m^3 51 kg

One carton box (service area)
1.12 x 0.38 x 0.38 m
0.161 m^3 22.5kg

Mounting flange interface

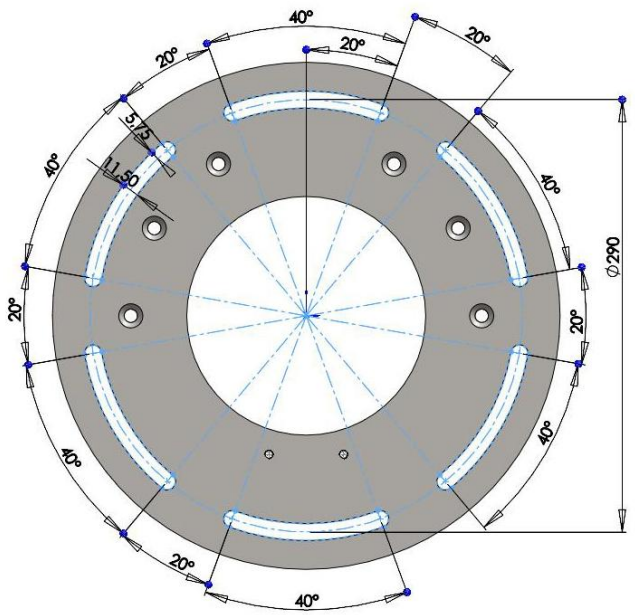

Outer diameter 340 mm

DT 5556 - Ed D - page 2/4 - We reserve the rights to modify our products without prior notice - Several patents pending regarding this product.

Preliminary

5860120-K03

5860020-K03 5860020G-K03

Antenna bottom

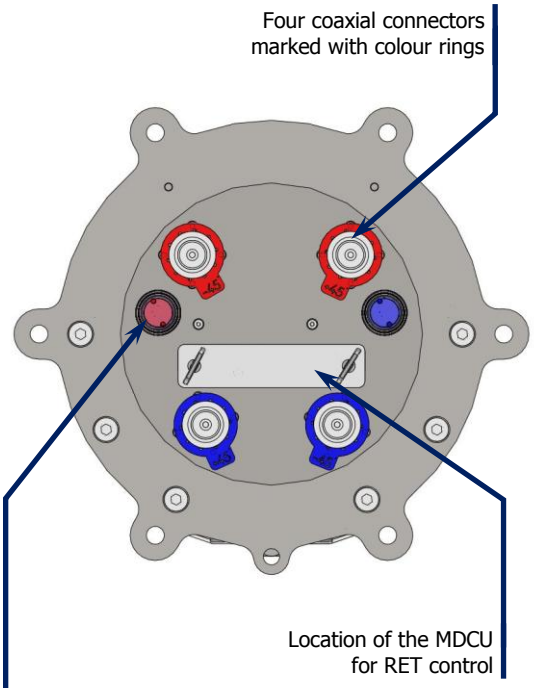

Two tilt indicators covered by a transparent cap. Manual adjustment and tilt reading are accessed by removing the cap. Knob colour is the same as connectors.

For RET control, the cap must be in place.

Red : 880 - 960 MHz
Blue : 1710 - 2170 MHz

Dimensions

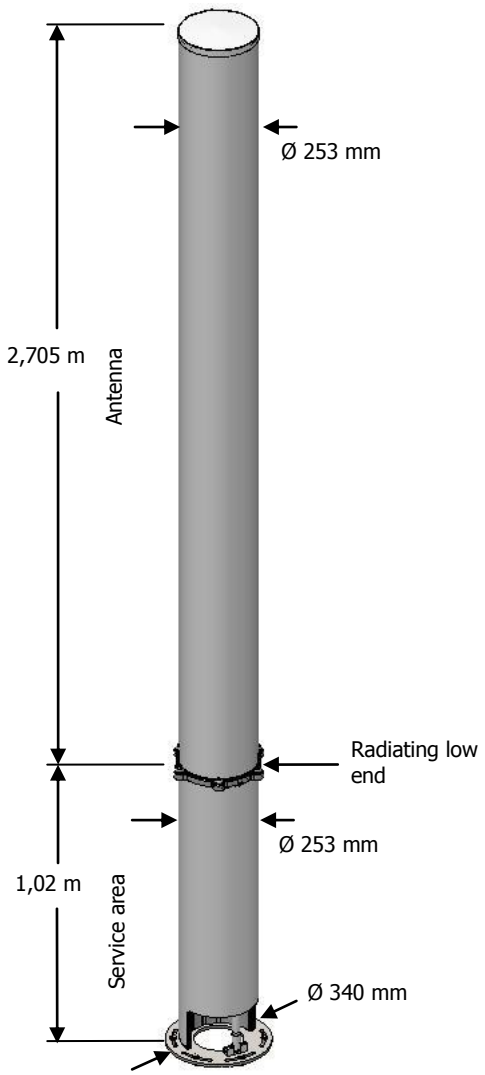

Service area (without shroud)

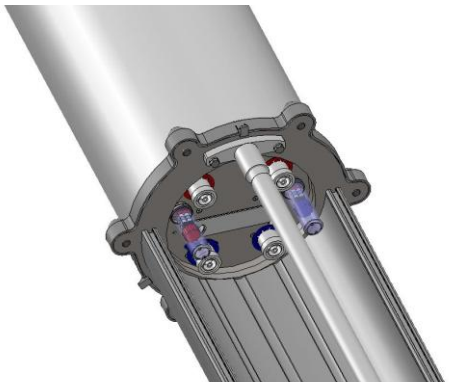

DT 5556 - Ed D - page 3/4 - We reserve the rights to modify our products without prior notice - Several patents pending regarding this product.

Installation accessories (to be ordered separately)

Tiltable Base Mount	
A Tiltable Base Mount is a galvanised steel base with a hinged top cover on which is bolted the service area. It needs to be bolted onto a horizontal support, as a concrete slab, or other.	
Part number	CLX-HNG-002
Dimensions	497 x 497 x 110 mm
Height with 5860120-K03	3.84 m
Weight	37 kg
For more details please contact us.	

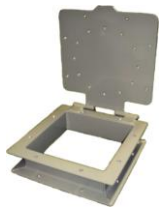
Tiltable base mount

CylLine Extension		
A CylLine Extension is a short (0.85 m) mounting mast only usable with CylLine range of antennas , and without use of the tiltable base mount. Its diameter is 388 mm, and it has the same outside material as the antenna, and a similar grey colour.		
Part number	CLX380-E085-002	
Dimensions	Height 0.85 m	Diameter 388 mm
Weight	41.5 kg	
Shroud	Outdoor plastic, Grey RAL 7035	
Flanges	Galvanised steel	
Wind speed	Operational : 160 km/h	Survival : 200 km/h
For more details please contact us.		

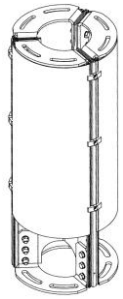
CylLine Extension

Non Penetrating Platform		
The non penetrating platform is a galvanized steel octagonal structure. It is designed to be free-standing on the top of a terrace.		
Part number	CLX-P050-001	CLX-P135-002
Dimensions	2544 x 2544 octagonal x 500 mm	2544 x 2544 octagonal x 500 mm
Includes a CylLine Extension	No	Yes
Total height with 5860120-K03	4.24 m	5.09 m
Total weight with 5860120-K03	609 kg	903 kg
For more details please contact us.		

CylLine on CLX-HNG-002

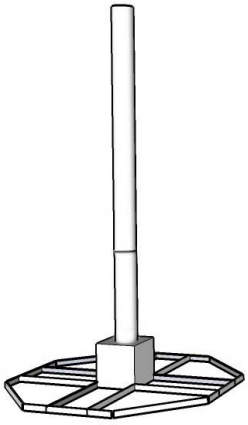
CylLine on CLX-P050-001

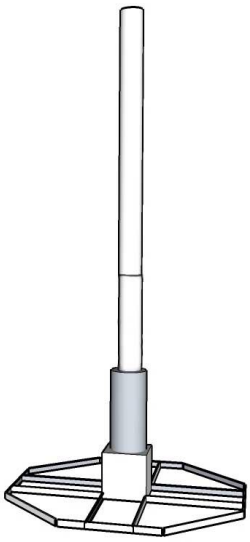
CylLine on CLX-P135-001

DT 5556 - Ed D - page 4/4 - We reserve the rights to modify our products without prior notice - Several patents pending regarding this product.